XVD-302

INSTALLATION GUIDE

AI Dash Camera

DOC. 1009A | 2026-09

Xirgo and the Xirgo logo are either trademarks or registered trademarks of Xirgo Holdings, Inc. in the United States and/or other countries. microSD is either a trademark or a registered trademark of SD-3C LLC in the United States and/or other countries. Apple and App Store are either trademarks or registered trademarks of Apple, Inc. in the United States and/or other countries. Google Play is either a trademark or registered trademark of Google, Inc. in the United States and/or other countries. Torx is either a trademark or registered trademark of Acument Intellectual Properties, LLC in the United States and/or other countries. Wi-Fi is either a trademark or registered trademark of the Wi-Fi Alliance in the United States and/or other countries. Other trademarks, registered trademarks, and trade names may be used in this document to refer to either the entities claiming the marks and names or their products. Xirgo disclaims any proprietary interest in the marks and names of others.
Xirgo is not responsible for errors in typography or photography.

© 2026 Xirgo Holdings, Inc.

TABLE OF CONTENTS

Introduction **1**

Safety Checklist **2**

Hardware Description **3**

What's in the Box **5**

Required Items **6**

Download the Xirgo Video Installer App 6

SmartOPS Account 6

Install the Device **7**

Replace an Existing KP2 AI Dashcam 7

New Installation 11

Connect to Vehicle Power **16**

Plan the Cable Run 16

Prepare the Cable Installation Location 16

Install Cable Clips 16

Slide the Power Cable into the Cable Clips 16

Route the Power Cable Down to the Driver-side Footwell 17

Connect the Device 17

Verify Operation **18**

Complete the Installation **19**

Remove the Camera(s) Protective Film 19

Remove the protective film from the camera lenses. 19

Use the App to Calibrate the Device, Aim the Camera(s), and Complete the Installation 19

Operation **20**

Configuration & Support **21**

Configuration 21

Support 21

Safety Advice **22**

Regulatory Information **23**

FCC 23

Warning: California Proposition 65 23

IC 24

Hardware and Software Versions 24

INTRODUCTION

Xirgo's XVD-302 is a single-SIM dashcam solution that provides road-facing video, driver-facing video, and vehicle telematics in a compact, modular package that is U.S. Connected Vehicle Ruling (CVR) ready.

The XVD-302 utilizes AI to empower fleet operators to help prevent collisions, defend against claims, and coach drivers with more insights from the OBDPRO smart cable enabling OEM data fusion with video events.

Powered by a next-gen AI platform, the full ADAS and DMS suite runs concurrently with Live Stream and Guard Mode; Xirgo's surveillance feature that works even when the ignition is off. Engineered to accept a variety of add-on driver-facing cameras, an optional OBDPRO smart cable, and cloud pairing to Xirgo's multi-cam hardware for up to 6-channel unified video, the XVD-302 expands to meet evolving needs. Compatible with Xirgo's KP2 dashcam mount, the XVD-302 is truly a next-generation all-in-one solution that provides seamless plug-and-play upgradability.

SAFETY CHECKLIST

WARNING: Device installation should be performed by a qualified individual or installation professional only. Working with a vehicle's power system can be dangerous to both you and your vehicle. Since vehicle designs and power/input sources can vary from vehicle to vehicle, the procedures described here are intended as a guide only.

- **Personal Protection Equipment:** To prevent injury, please wear appropriate personal protection equipment.
- **Site Requirements:** Place the vehicle on a flat surface in an area that is sheltered from weather (rain, snow, wind, etc.).

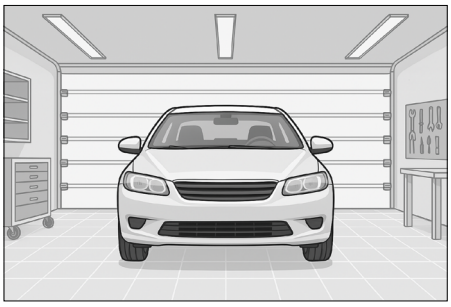

HARDWARE DESCRIPTION

XVD-302 dimensions (shown with optional XVA-CAM-DF-01 Driver-Facing Camera)

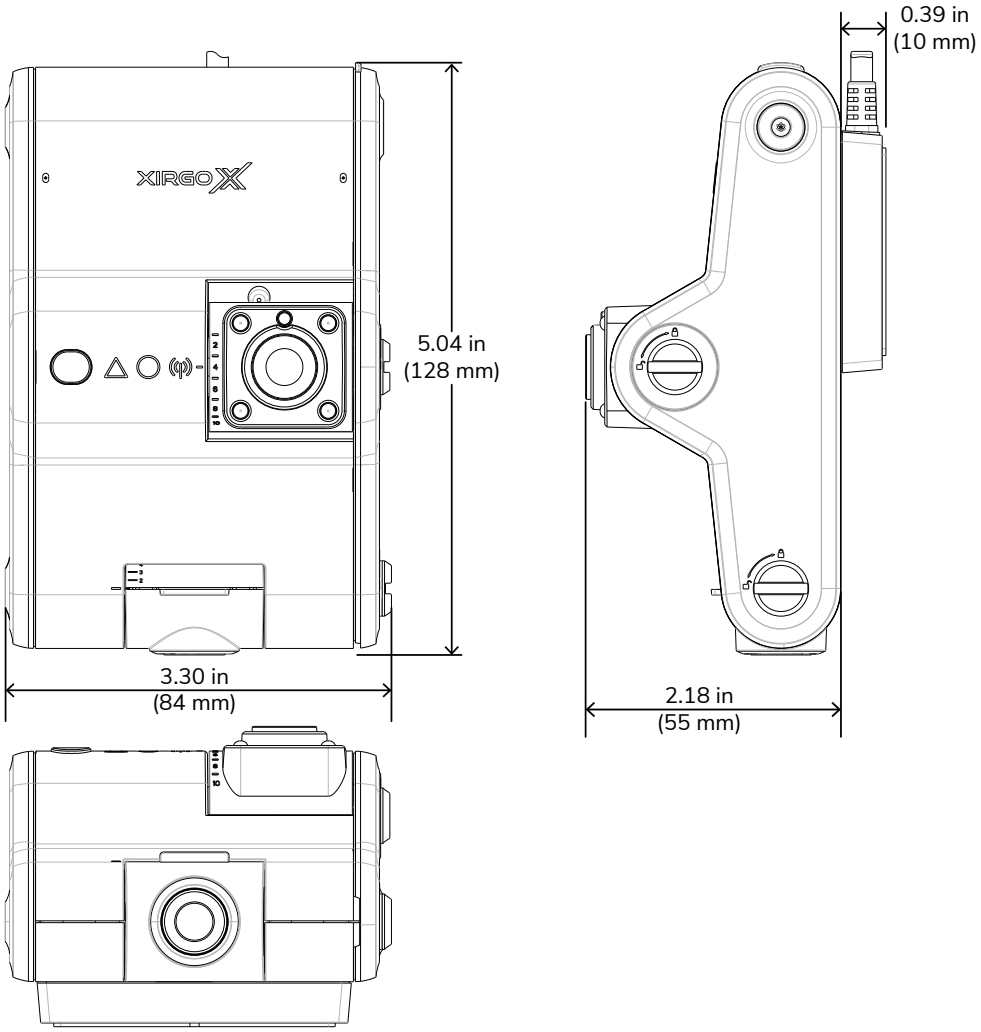

XVD-302 parts

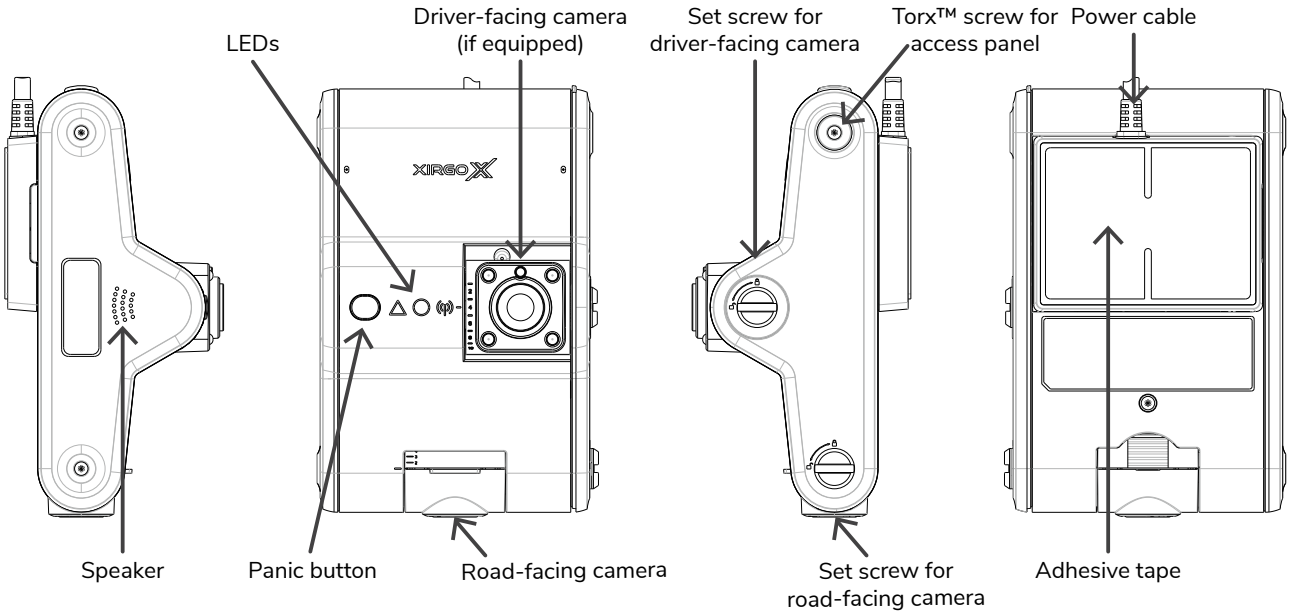

WHAT'S IN THE BOX

Item	Quantity	Description
XVD-302 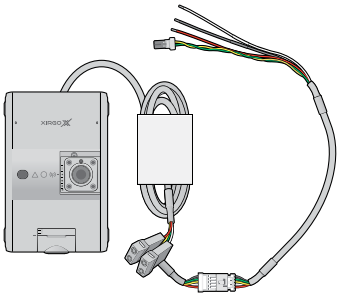	1	AI dashcam kit includes mounting bracket and attached 3-wire power cable
Adhesive pad 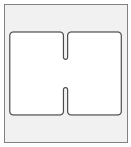	1	Spare adhesive pad for attaching mounting bracket to vehicle glass
microSD™ card	1	Preinstalled microSD card
Nano SIM card	1	Preinstalled nano SIM card
Alcohol prep pad	2	Alcohol prep pads for cleaning mounting surfaces
Cable clips 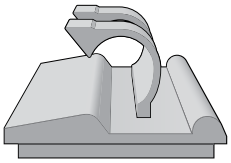	5	Self-adhesive cable clip for routing cable
Torx wrench 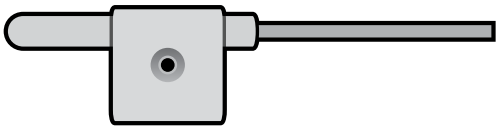	1	Wrench for removing side cover

REQUIRED ITEMS

- Standard tools for installation of mobile electronics
- The Xirgo Video Installer app and a SmartOPS account

Download the Xirgo Video Installer App

Download the Xirgo Video Installer app to a mobile device from the Apple® App Store® or from the Google Play™ store.

QR code links to the Xirgo Video Installer app on the Apple App Store and Google Play store are shown below.

Apple App Store and Google Play store QR codes

SmartOPS Account

The Xirgo Video Installer app requires a SmartOPS account for use. If you don't have a SmartOPS account, open the app and click **Create one here** to create a SmartOPS account.

INSTALL THE DEVICE

The XVD-302 can easily replace an existing Xirgo KP2 AI dashcam or it can be used in a new installation.

Replace an Existing KP2 AI Dashcam

The following tools are required to replace an existing KP2 AI Dashcam with the XVD-302:

- Flat tip screwdriver
- Torx wrench

Remove the KP2 AI Dashcam

1. Turn off vehicle power.
2. Use the Torx wrench included with the XVD-302 to loosen the KP2's Torx screws and remove the KP2's side cover.

Loosen Torx screws and remove side cover

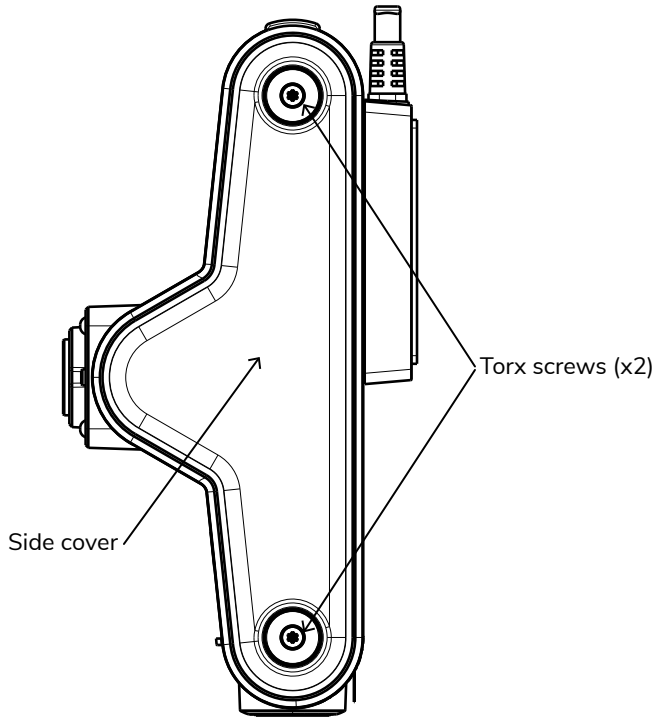

3. Slide the KP2 to the left until it stops and pull the KP2 away from the mounting bracket.

Slide KP2 to remove from the mounting bracket

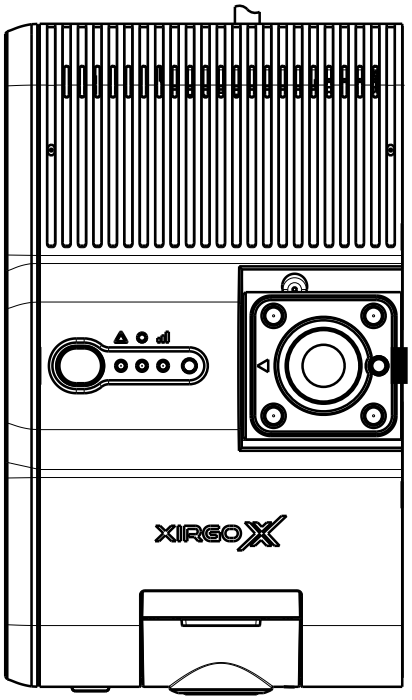

4. On the XVD-302, use the Torx wrench and flat-tip screwdriver to loosen the Torx screw and camera set screws, and then remove the side cover.

Loosen Torx screw and camera set screws, and remove side cover

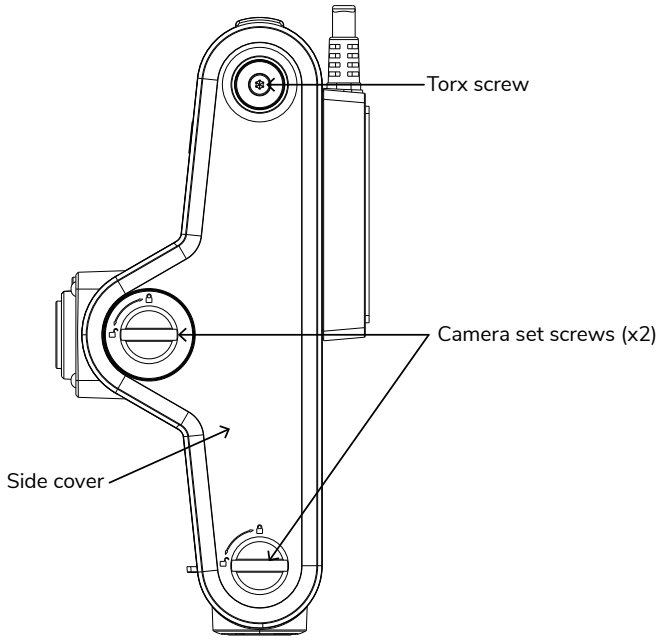

5. Place the XVD-302 onto the mounting bracket and then slide it to the right until it clicks into place.

Slide XVD-302 to attach to the mounting bracket

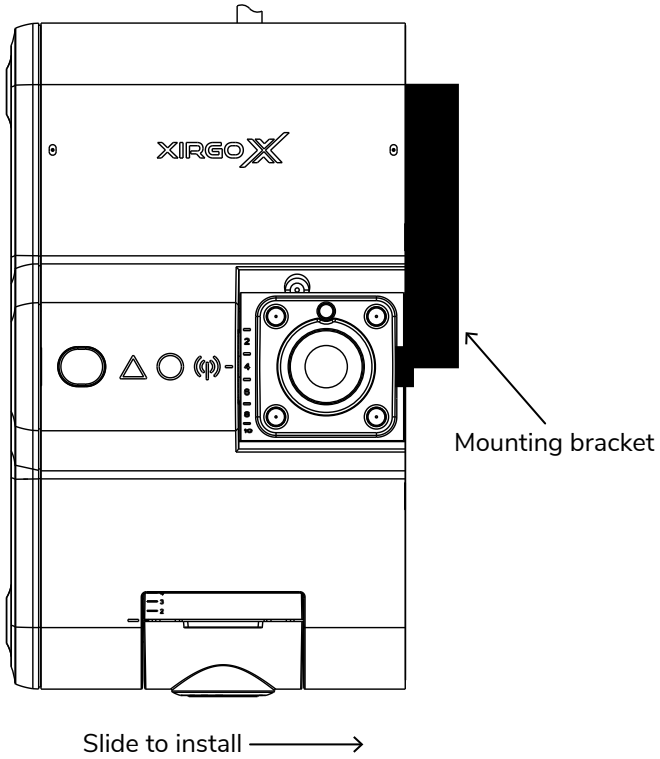

6. Replace the XVD-302's side cover and secure the Torx screw and camera set screws.

New Installation

Identify an Installation Location

The XVD-302 is designed for installation on a vehicle's windshield.

The XVD-302 should reside close to the windshield's center. To minimize obstruction of the driver's view, consider placing the XVD-302 behind the rear-view mirror.

Caution: If equipped with a driver-facing camera, the XVD-302's driver-facing camera must not be blocked by any objects including mirrors, visors, cables, decor, etc.

Note: Observe all local ordinances when identifying an installation location.

Position the XVD-302 close to the center of the windshield

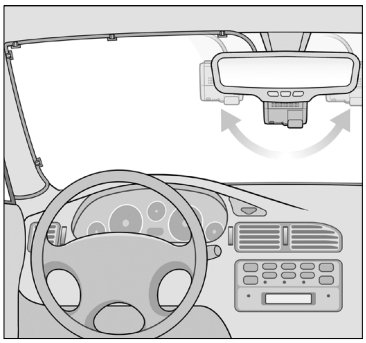

Installation Location for XVD-302 with Driver-Facing Camera

For optimal performance of driver monitoring systems, special consideration must be given to the location of the XVD-302 and its driver-facing camera.

Caution: Consider the variable positions of the driver's seat and the rear-view mirror to ensure driver adjustments do not affect the camera's view.

If the XVD-302 cannot be mounted where the built-in driver-facing camera has a clear view of the driver, consider one of the XVD-302's remote driver-facing camera options.

Vertical Position

The driver-facing camera must have a clear view of the driver's head and torso.

Some things to consider when vertically positioning the XVD-302 closer to the driver:

- The XVD-302 must not block the driver's field of view.
- The XVD-302's driver-facing camera must not be blocked by an extended visor.
- The XVD-302's driver-facing camera must have a clear vertical field of view from the top of the driver's head to the bottom of the driver's torso.
- Depending on the slope of the windshield, lowering the vertical position of the XVD-302 may increase the distance between the driver and the XVD-302. Ensure that the distance between the driver-facing camera and the driver's face is between 15.5 inches (~40 cm) and 35.5 inches (~90 cm).

Vertical position behind mirror

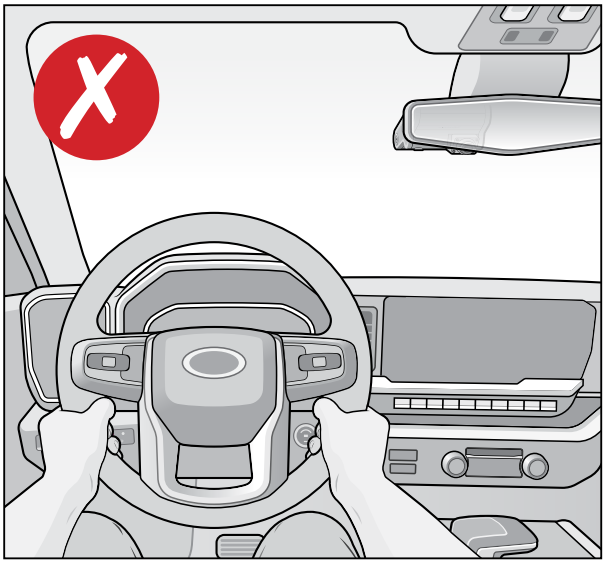

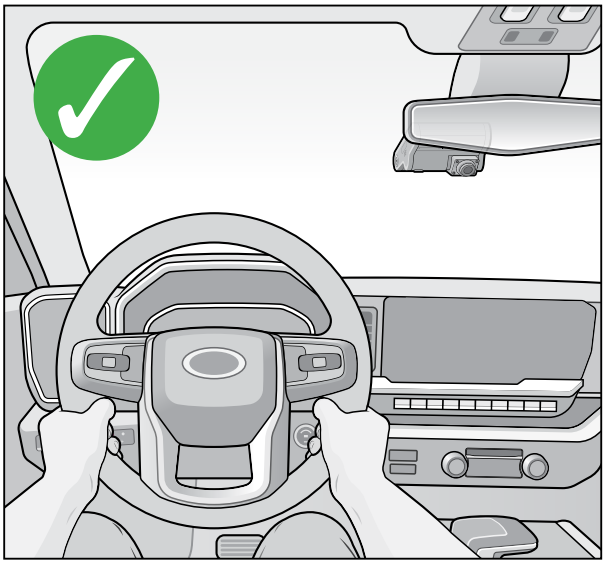

Vertical position behind visor

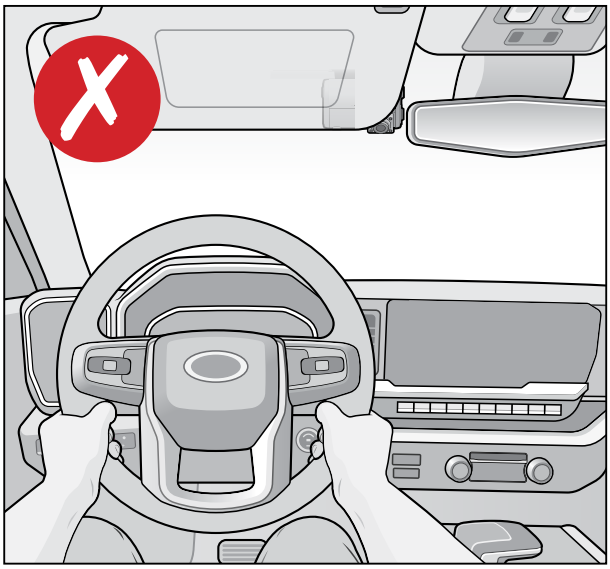

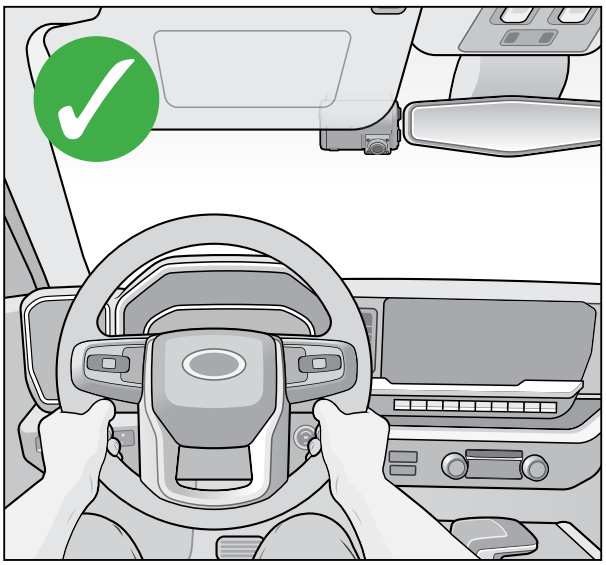

Horizontal Position

The XVD-302 should be positioned on the driver-side of the vehicle. Move the XVD-302 closer to the driver to include more of the driver's body in the camera's field of view.

Some things to consider when moving the XVD-302 closer to the driver:

- The XVD-302 must not block the driver's field of view.
- The XVD-302's driver detection capabilities are improved when the camera is closer to the driver and provides a better view of the driver.

Horizontal position for driver-facing camera

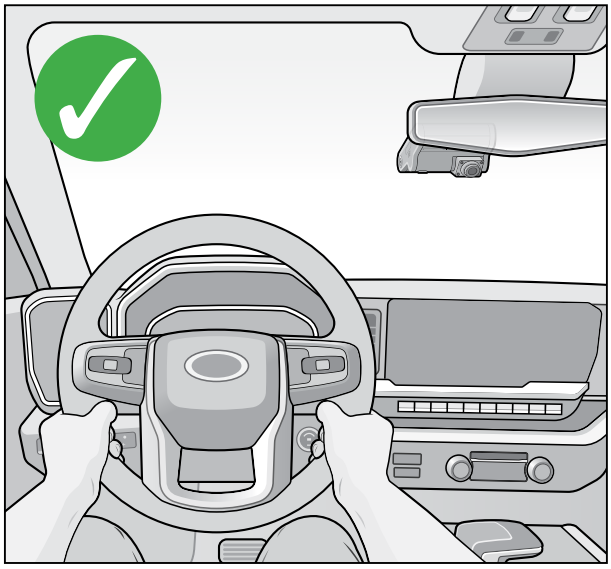

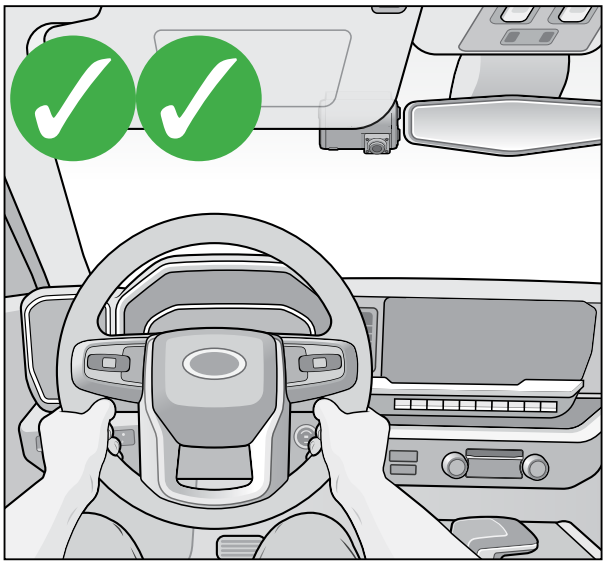

Prepare the Installation Location

Notes:

- Ensure your windshield is dry and has no chips or cracks before installation. If the windshield is compromised, device application may cause chips or cracks to spread.
- The XVD-302 should be installed in a moderate temperature environment (50° F to 80° F (10° C to 27° C)). If installing the device in severe cold weather, use the vehicle defrosters to warm the windshield.

1. Use an included alcohol prep pad to clean the windshield where the device will be installed.

   Clean the installation location

   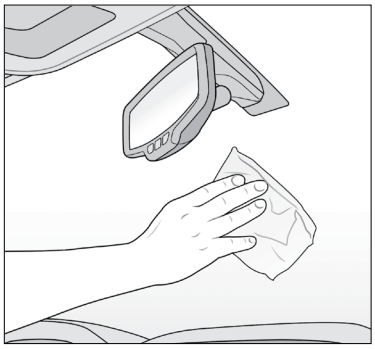

2. Make sure all surfaces are completely dry and free of moisture.

Attach the Device to the Windshield

1. Remove the plastic backing from the adhesive tape on the back of the mounting bracket.
2. Position the device so it is flush with the windshield.

   Note: Ensure the device placement conforms with local safety mandates.

3. Press the XVD-302 evenly to the windshield to ensure the mounting bracket's adhesive is flush against the glass and maintain pressure for at least 30 seconds.

   Apply the device to the windshield

   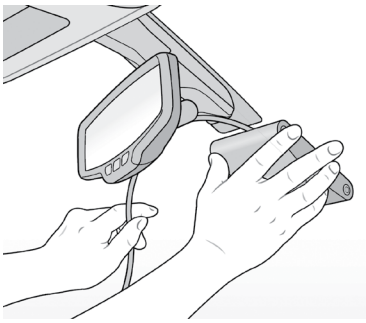

4. Go outside the vehicle and confirm 80%–90% of the adhesive tape's surface area connects with the glass. If necessary, momentarily apply pressure where the tape is not in contact with the glass.

Note: If 20% or more of the adhesive tape's surface area is still not making contact with the glass, remove the XVD-302 from the mounting bracket and press the mounting bracket firmly against the glass to improve surface contact and remove air bubbles.

1. On the XVD-302, use the Torx wrench and flat-tip screwdriver to loosen the Torx screw and camera set screws, and then remove the side cover.

   Loosen Torx screw and camera set screws, and remove side cover

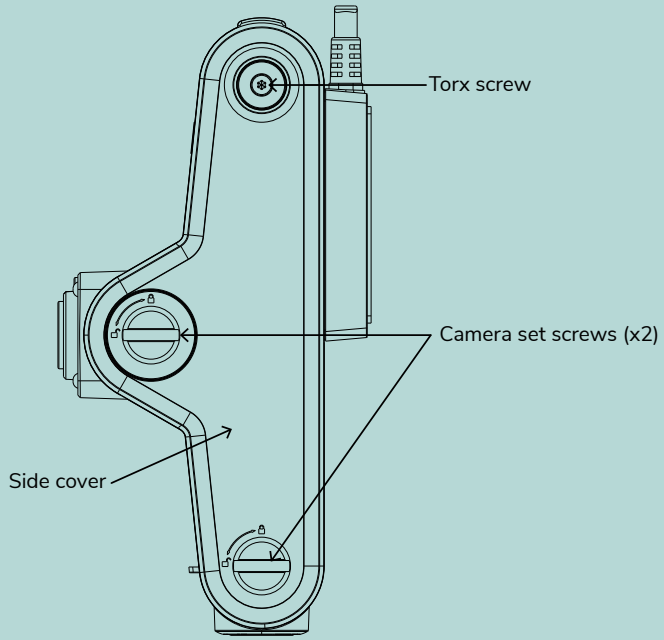

2. Slide the XVD-302 to the left until it stops and pull the XVD-302 away from the mounting bracket.

   Slide XVD-302 to remove from the mounting bracket

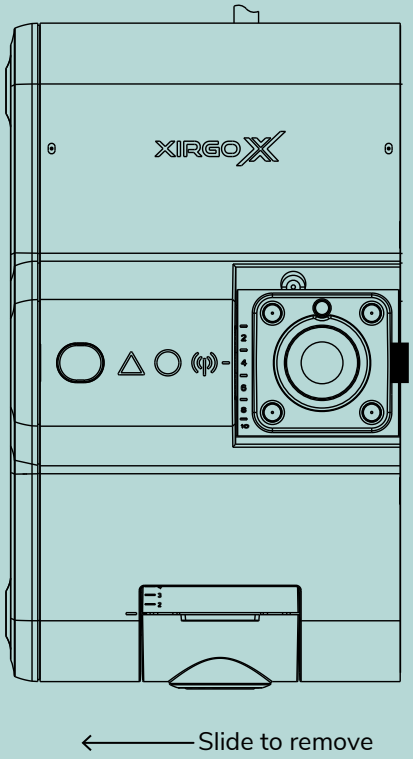

3. Momentarily apply pressure to the mounting bracket until 80%–90% of the adhesive tape's surface area connects with the glass.
4. Replace the XVD-302 on the mounting bracket, attach the side cover, and tighten the screws.

CONNECT TO VEHICLE POWER

The XVD-302 can connect to vehicle power through a traditional 3-wire power cable connection (attached) or through dedicated adapter cables with connectors that provide ease of connection and enhanced telematics. The power cable between the device and the adapter cable is secured to cable clips along the top of the windshield and then routed through the vehicle's A pillar to the power connection.

Plan the Cable Run

Place the device's power cable where it will reside along the vehicle's headliner and down the A-pillar, behind airbag deployment paths, to see how to route the power cable and how much slack to leave to connect the adapter cable to the vehicle's power source.

Prepare the Cable Installation Location

Notes:

- Ensure your windshield is dry and has no chips or cracks before installation. If the windshield is compromised, the cable clips may cause chips or cracks to spread.
- Cable clips should be installed in a moderate temperature environment (50° F (10° C) to 80° F (27° C)). If installing the device in severe cold weather, use the vehicle defrosters to warm the windshield.

1. Use an included alcohol prep pad to clean the windshield where the cable clips will be installed.
2. Make sure all surfaces are completely dry and free of moisture.

Install Cable Clips

1. Remove the adhesive from a cable clip and with the clip's opening facing upwards, apply the cable clip along the cable route at the top of the windshield to the A-pillar.
2. Press the cable clip evenly to the windshield to ensure the cable clip's adhesive is flush against the glass and maintain pressure for at least 30 seconds.
3. Repeat steps 1 and 2, evenly placing cable clips approximately 6 inches (approximately 15 centimeters) apart.

Slide the Power Cable into the Cable Clips

1. Slide the power cable into the cable clips.
2. Gently pull the cable taut to create a straight cable line.

Slide the power cable into the cable clips

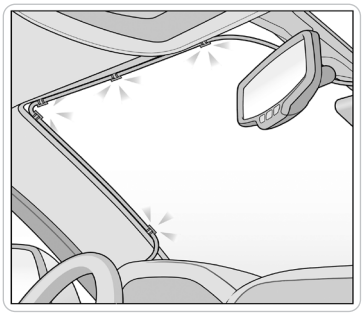

Route the Power Cable Down to the Driver-side Footwell

Route the power cable down the side of the windshield, behind interior panels or weather stripping as shown in the following diagram. The cable should fall near the driver-side footwell.

Caution: Avoid placing the cable in front of airbag deployment paths.

Route the power cable down the A-pillar

Connect the Device

Once the power cable is routed to the driver-side footwell, it can be connected to vehicle power.

3-Wire Adapter Cable

The 3-wire adapter cable is already connected to the power cable and provides a quick way to provide power to the XVD-302 from a vehicle's power system.

Connect the adapter cable as shown in the following diagram.

3-wire adapter cable

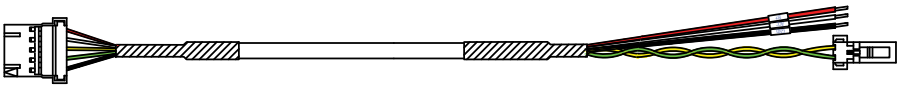

To XVD-302

To vehicle:
Red (B+): To constant power supply
Black (GND): To vehicle ground
White (ACC): To vehicle ignition
Green and Yellow are not connected

Note: Connect the red wire to a fused constant battery-voltage source, such as an approved fuse-box battery feed or OEM constant-power point. Do not connect directly to the battery terminal unless specifically required by the vehicle-specific installation procedure and protected by the proper inline fuse.

Other Adapter Cables

Other adapter cables are available from Xirgo to provide connections to meet specific vehicle needs. Contact your Xirgo representative for more information.

VERIFY OPERATION

Turn on the vehicle. The device will power on and a △ ○ (Red/Blue/Green) LED sequence will indicate startup.

After startup, the circle icon (○) will light (blue), indicating proper operation and recording, and the antenna icon (((•))) will light (green), indicating connectivity with the cellular network. Refer to “Operation” on page 21 for more information on LED operation.

Note: After installation is complete, it may be necessary to move the vehicle outside to obtain a stronger GPS signal, as the shelter can limit GPS reception

COMPLETE THE INSTALLATION

Use the Xirgo Video Installer app on your mobile device to complete the installation. The app provides utilities for calibrating the device and aiming its camera(s). The app also provides the installer with the ability to document the installation for auditing purposes.

Remove the Camera(s) Protective Film

Remove the protective film from the camera lenses.

Use the App to Calibrate the Device, Aim the Camera(s), and Complete the Installation

Note: App users must have a SmartOPS login to use the app. If you don't have a SmartOPS account, open the app and click **Create one here** to create a SmartOPS account.

Follow the app's instructions to configure the device for operation, aim the road-facing camera and driver-facing camera (if installed), and document the installation.

OPERATION

Once installation is complete, start the vehicle. The XVD-302 will power up and within a minute will begin to operate.

The XVD-302 is configured from the factory or through the SmartOPS software platform. The following section provides details for determining the operating status of the device.

LED Function	Description
(Red) - (Blue) - (Green) (1/3 Hz, 100% duty cycle, one color at a time: Red then Blue then Green)	Device is booting.
(Blue) - (Green) (0.5 Hz, 50% duty cycle)	Device is powering off (supercapacitor power).
(Blue) (Solid)	Continuous recording is enabled.
(Green) (0.5 Hz, 50% duty cycle)	Establishing network connection.
(Green) (Solid)	Connected to network.
(Red) (0.5 Hz, 50% duty cycle)	Acquiring GNSS signal.
(Blue) - (Green) (Simultaneously at 0.5 sec on, 4.5 sec off)	Device is in Guard mode.
(Blue) (2 Hz, 50% duty cycle)	SD card formatting in progress.
(Red) (2 Hz, 50% duty cycle)	G-sensor calibration in progress.
(Green) (2 Hz, 50% duty cycle)	Firmware update in progress.
(Blue) (Two blinks, 0.5 sec on 0.5 sec off, followed by 2 seconds off)	SD card error: SD card is not installed or writing to the SD card failed.
(Green) (Two blinks, 0.5 sec on 0.5 sec off, followed by 2 seconds off)	Network communication error: There is either a server communication error, or a SIM error.
(Red) (Four blinks, 0.5 sec on 0.5 sec off, followed by 2 seconds off)	The input voltage is outside of the acceptable range.
(Red) - (Blue) - (Green) (Two simultaneous blinks, 0.5 sec on 0.5 sec off, followed by 2 seconds off)	Hardware or system error.

CONFIGURATION & SUPPORT

Configuration

The device is configured with Xirgo's SmartOPS platform, Xirgo's device management and configuration portal, where partners/users can adjust operation of the device to meet operational requirements and manage firmware. For details, refer to the XVD-302 Configuration Guide (Doc. 1017) which can be found at https://xirgo.com/xvd-302-setup.

Support

This device is designed and built for ease of installation and reliability. However, if you encounter difficulties while installing or using this product, technical support is available at https://xirgo.com/contact/support/.

SAFETY ADVICE

Caution

This device complies with Part 15 of the FCC Rules. Operation is subject to the following two conditions:
(1) This device may not cause harmful interference, and (2) this device must accept any interference received, including interference that may cause undesired operation.

Caution

Any changes or modifications (including the antennas) to this device that are not expressly approved by the manufacturer may void the product warranty.

REGULATORY INFORMATION

FCC

This equipment with FCC ID GKM-XVD-302.

Contains FCC ID 2BEY3SUS600LDA

Subject to the Federal Communications Commission (FCC) and Industry Canada (IC)rules.

Notice:
Changes or modifications not expressly approved by the party responsible for compliance could void the user's authority to operate the equipment.

This device complies with Part 15 of the FCC Rules.

Operation is subject to the following two conditions:

1. This device may not cause harmful interference,

2. This device must accept any interference received, including interference that may cause undesired operation.

Changes or modifications made to this equipment not expressly approved by Xirgo Holdings, Inc. may void the FCC authorization to operate this equipment.

Note: This equipment has been tested and found to comply with the limits for a Class B digital device, pursuant to part 15 of the FCC Rules. These limits are designed to provide reasonable protection against harmful interference in a residential installation. This equipment generates, uses and can radiate radio frequency energy and, if not installed and used in accordance with the instructions, may cause harmful interference to radio communications. However, there is no guarantee that interference will not occur in a particular installation. If this equipment does cause harmful interference to radio or television reception, which can be determined by turning the equipment off and on, the user is encouraged to try to correct the interference by one or more of the following measures:

1. Reorient or relocate the receiving antenna.

2. Increase the separation between the equipment and receiver.

3. Connect the equipment into an outlet on a circuit different from that to which the receiver is connected.

4. Consult the dealer or an experienced radio/TV technician for help.

Radio frequency radiation exposure information:
Changes or modifications not expressly approved by the party responsible for compliance could void the user's authority to operate the equipment.

Warning: California Proposition 65

This equipment complies with FCC RF radiation exposure limits set forth for an uncontrolled environment. This device and its antenna must not be co-located or operating in conjunction with any other antenna or transmitter. This equipment should be installed and operated with a minimum distance of 20 cm between the radiator and your body.

IC

IC: 10281A-XVD-302

Contains IC 32052-SUS600LDA

Antenna Statement
Changes or modifications not expressly approved by the party responsible for compliance could void the user's authority to operate the equipment.

Under Industry Canada regulations, this radio transmitter may only operate using an antenna of a type and maximum (or lesser) gain approved for the transmitter by Industry Canada. To reduce potential radio interference to other users, the antenna type and its gain should be so chosen that the Equivalent Isotropically Radiated Power (E.I.R.P.) is not more than that necessary for successful communication.

Conformément à la réglementation d'Industrie Canada, le présent émetteur radio peut fonctionner avec une antenne d'un type et d'un gain maximal (ou inférieur) approuvé pour l'émetteur par Industrie Canada. Dans le but de réduire les risques de brouillage radioélectrique à l'intention des autres utilisateurs, il faut choisir le type d'antenne et son gain de sorte que la Puissance Isotrope Rayonnée Équivalente (P.I.R.E.) ne dépasse pas l'intensité nécessaire à l'établissement d'une communication satisfaisante.

License exempt
This device complies with Industry Canada license-exempt RSS standard(s). Operation is subject to the following two conditions:

1. This device may not cause interference,

2. This device must accept any interference, including interference that may cause undesired operation of the device.

Le présent appareil est conforme aux CNR d'Industrie Canada applicables aux appareils radio exempts de licence. L'exploitation est autorisée aux deux conditions suivantes:

1. L'appareil ne doit pas produire de brouillage, et

2. L'appareil doit accepter tout brouillage radioélectrique subi, même si le brouillage est susceptible d'en compromettre le fonctionnement.

Hardware and Software Versions

HW Version: V100

SW Version: 1.0.0

XVD-302 INSTALLATION GUIDE

DOC. 1009A / PUBLISHED 2026-09

© 2026 Xirgo Technologies. All Rights Reserved.
xir4950-0825